## ALI1-P Model CE

- Permanent magnet motor 12 - 24 Vdc
- Double worm gearbox
- ACME lead screw
- Aluminum push rod (Stainless steel on request)
- Permanent grease lubrication
- IP 65, tested according to rule CEI EN 60529
- Working temperature range -10°C +60°C
- Intermittent duty S3 30% (5 min) a 30°C*
- Encoder on request
- Limit switches on request (ALI1-PF)

(*) For any special duty please contact our technical dept.

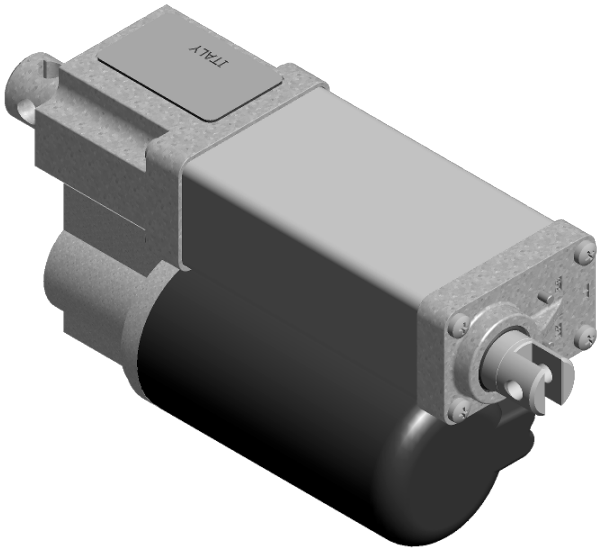


| ALI1-P (Vdc) | | | | | | |
|---|---|---|---|---|---|---|
| ***Fmax* (N)** | ***Speed* (mm/s)** | ***Version*** | ***Motor size*** | ***Motor power* (KW)** | ***Motor speed* (rpm)** | ***Max Current for F max(A) 24Vcc*** ** |
| 1200 | 16.5 | M01 | 40 | - | 6000 | 4,2 |
| 1550 | 11 | M02 | 40 | - | 6000 | 3,8 |
| 2000 | 8.3 | M03 | 40 | - | 6000 | 3,9 |
| 2500 | 5.6 | M04 | 40 | - | 6000 | 3,6 |
| 2500 | 2.8 | M05 | 40 | - | 6000 | 2,8 |
| 2500 | 0.9 | M06 | 40 | - | 6000 | 1,8 |

When stroke is longer than 200 mm, check STROKE SETUP section.

** For 12 Vdc power supply currents are doubled and loads are 20% lower.

BEFORE OPERATING ACTUATOR MAKE SURE YOU READ AND UNDERSTOOD BASIC OPERATIONAL INSTRUCTIONS SHOWN ON USERMANUALS, AVAILABLE FROM WEBSITE.

THIS DOCUMENT DISPLAYS MOST TYPICAL STANDARD FEATURES AND SETUPS: CONTACT OUR OFFICES FOR MORE.

ACTUATOR SHALL NOT COME TO **MECHANICAL STROKE-END**, TO AVOID **FAILURES**.

CONSIDER MECVEL's LIMITSWITCHES ( MODEL ALI1-PF) OR PUT THEM ON MACHINE/FRAME.

⚠ MecVel reserves the right to change products information and/or features without notice; all data contained in this catalogue are purely indicative and not binding for the company.

## ALI1-P

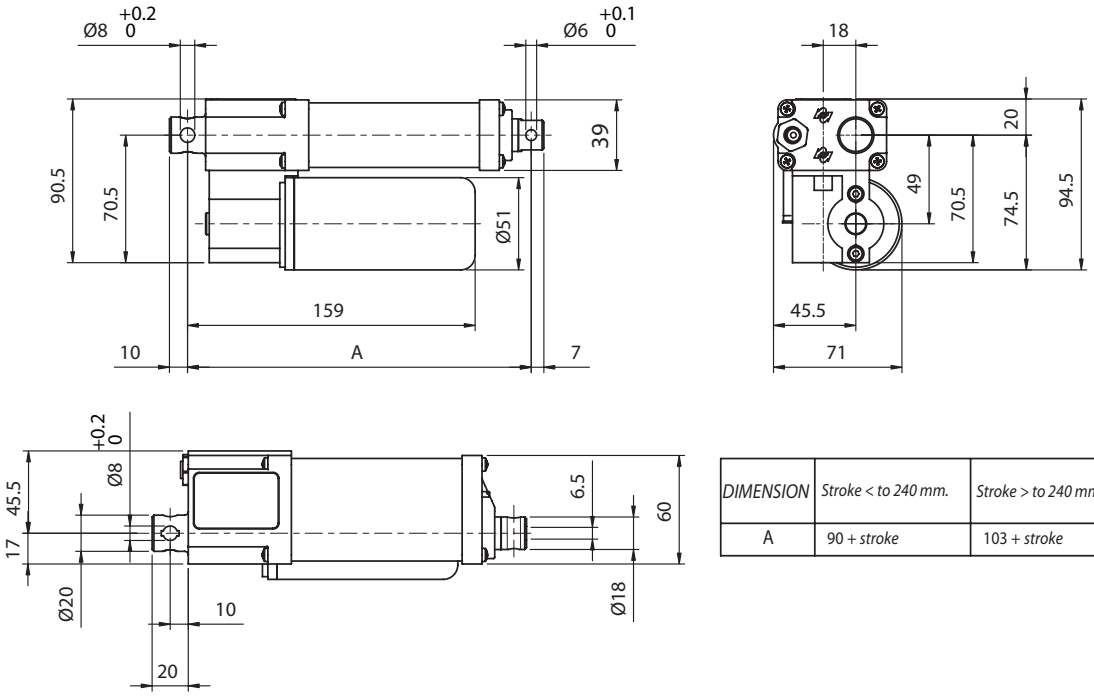


| DIMENSION | Stroke < to 240 mm. | Stroke > to 240 mm. |
|---|---|---|
| A | 90 + stroke | 103 + stroke |

### ELECTRICAL WIRINGS

Options available:

C01/C08 = motor
C02/C09 = N° 2 microswitches,diode-wired
C03/C10 = motor + N° 2 micro
C04/C11 = motor + N° 3 micro
C05/C12 = motor + encoder
C06/C13 = N° 2 micro diode wired + encoder
C07/C14 = motor + N° 2 micro + encoder
C00 = special wiring (Presence of not standard options)

### WARNING:

Micros are actuated by a cam lying on push-rod itself. Micro signal, for high speeds needs to be handled in its very impulse (I.E.when actuated) and not in its state.
Alternatively, MecVel can add a bush to keep the microswitch lever pressed for a longer time avoiding switch signal mistakes, but cause loss of 10 mm of stroke.
Connections C02 and C06 make a circuit which stops motor supply, so that the push rod won't overstep the area of the two micros.
This system can work only if inertia generated by the actuator and load connected to it does not allow to over-step the micro when stroke is over.
So, this works just with low speeds (M01 - M03), with a load opposing the ongoing direction of the push rod. If not, relay or PLC solutions, using C03 and C07 connections, are needed.
Wiring diagrams of connections above are following:

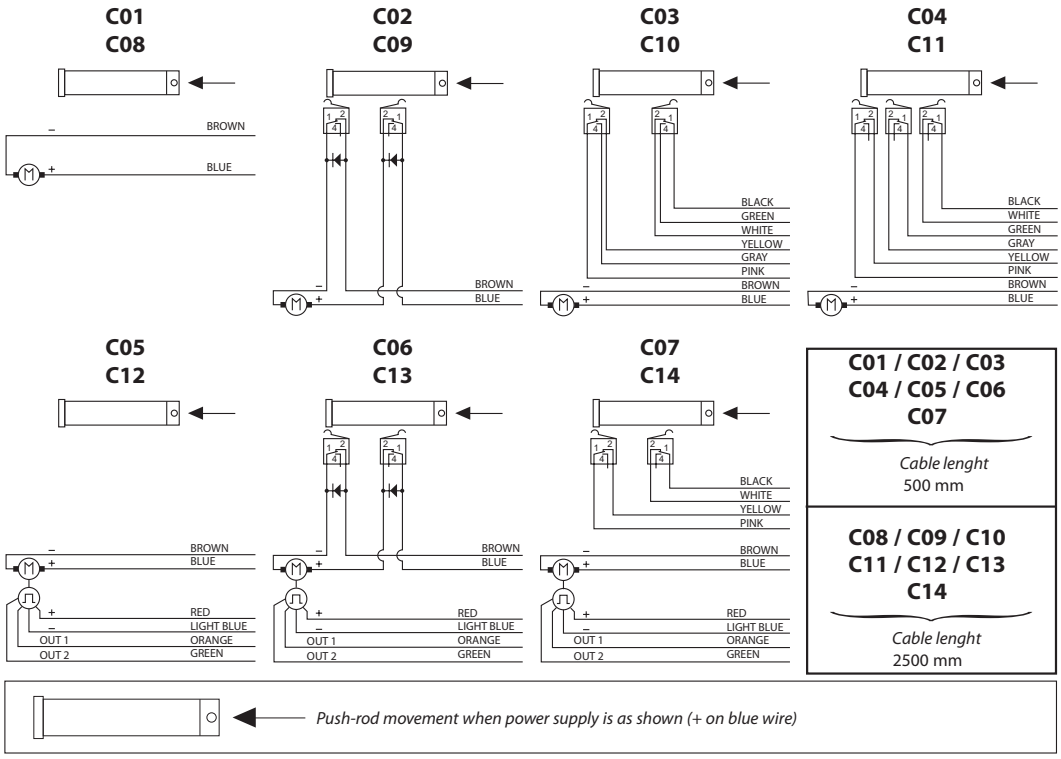

***STROKE SETUP:*** Useful tips for handling stroke and avoid run-on-block collision.

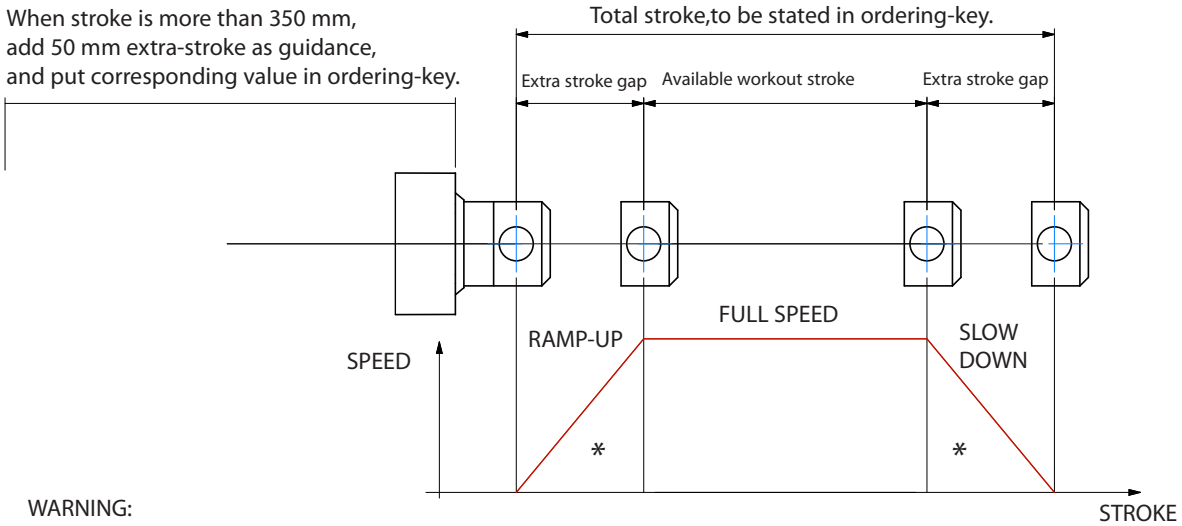


WARNING:
SPEED-TIMING ALONG STROKELENGHT:
ramps are extremely important with high speed !!! Inverter or PWM drive recommended!
* The more speed raises the more extra stroke has to raise too.

***BUCKLING:*** With strokes longer than 300mm, BUCKLING can be a risk: please check mounting with our offices and/or see usermanuals.

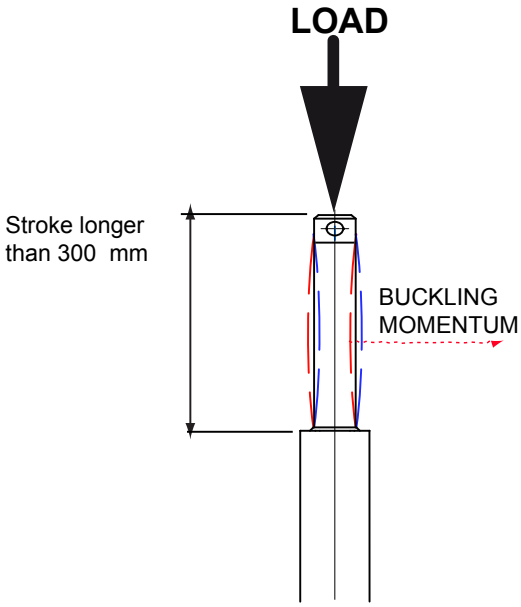


IMPORTANT:
Long strokes, even if load is low, can generate significant buckling momentums, as sketch slows.
This happens when actuator is in its all-opened position: that's the reason why we recommend 100 mm extra-stroke.
Pushtube will have this100 mm-portion always inside the overtube, improving guidance against buckling.
For more information on this, contact our office.

## ORDERING KEY

**ALI1P / 0250 / M01 / 12 / M0 / C02 / P1 / A1**

**MODEL:**
ALI1-P (without limit switches) ALI1-PF (with limit switches)

**STROKE:**
es. 250 mm = 0250

**VERSION:** (pag.17)
M01 / M02/ M03 / M04 / M05/ M06
M00 = Not standard speed

**MOTOR:** (available)
**12** = 12 Vdc
**24** = 24 Vdc

**MOTOR POSITION:**
**M0** / **M1**

**MOTOR OPTIONS:**
**C01 / C08:** Motore / Motor
**C02 / C09:** 2LS Diode wired
**C03 / C10:** Motor + 2LS
**C04 / C11:** Motor + 3LS
**C05 / C12:** Motor + encoder
**C06 / C13:** 2LS diode wired + encoder
**C07 / C14:** Motor + encoder + 2LS
**C00:** Special wiring (Presence of not standard options)
Note: LS (limit switches)

**REAR END:**
**P0** = None **P1 / P2** = standard

**FRONT END:**
**A2** = Yoke (Std pag.18) **A3** = Yoke + Clip
**A4** = Rod end **A7** = M8x20 male

**NOTE: COMPLETE THE ORDERING KEY ADDING THE OPTIONS YOU CAN FIND IN THE "ACCESSORIES AND OPTIONS" SECTION**

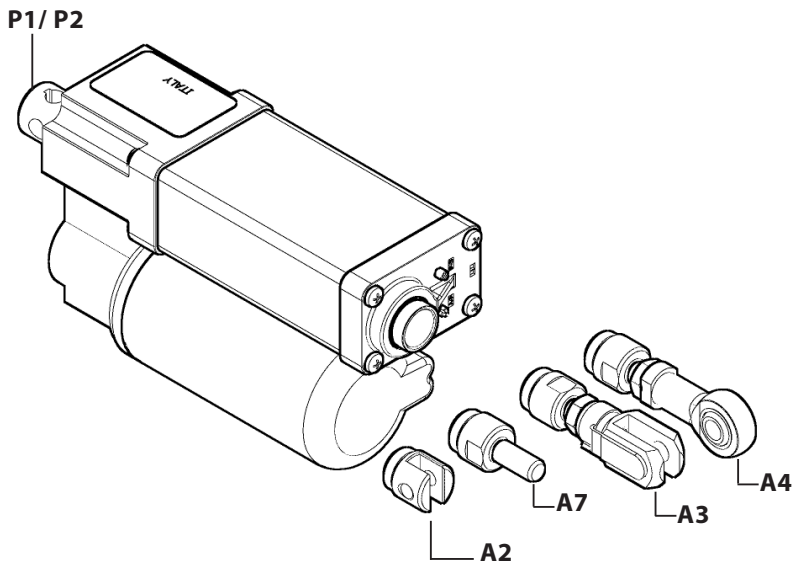


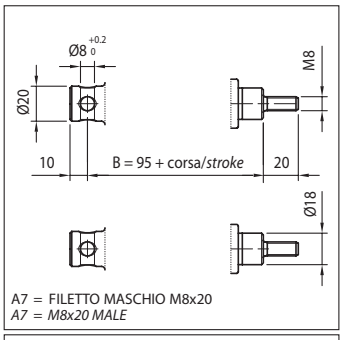


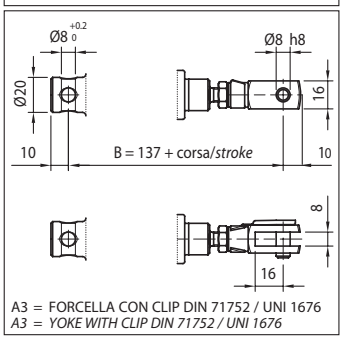


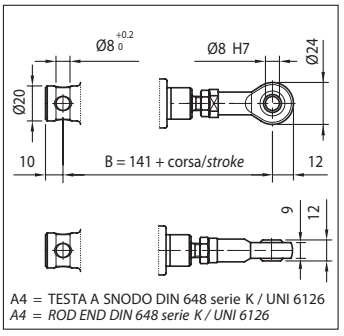


***Note:*** *"B" dimension changes according to model*

ALI1-PF = See pictures
ALI1-PF stroke > 240 mm = + 13 mm